DEFLECTION CALCULATIONS (from Nilson and Nawy)

The deflection of a uniformly loaded flat plate, flat slab, or two-way slab supported by beams on column lines can be calculated by an equivalent frame method that corresponds with the method for moment analysis. The definition of column and middle strips, the longitudinal and transverse moment distribution coefficients, and many other details are the same as for the moment analysis. Following the calculation of deflections by this means, they can be compared directly with limiting values like those of Table 9.5(b) of ACI which are applicable to slabs as well as to beams.

A slab region bounded by column centerlines is shown in Figure 1. While no column-line beams, drop panels, or column capitals are shown, the presence of any of these introduces no fundamental complication.

The deflection calculation considers the deformation of such a typical region in one direction at a time, alter which the contributions front each direction are added to obtain the total deflection at any point of interest.

From Figure 1a, the slab is considered to act as a broad, shallow beam of width equal to the panel dimension l_y, and having the span l_x. Initially, the slab is considered to rest on unyielding support lines at $x = 0$ and $x = l_x$.

Because of variation of moment as well as flexural rigidity across the width of the slab, all unit strips in the X direction will not deform identically. Typically the slab curvature in the middle-strip region will be less than that in the region of the column strips because the middle-strip moments are less. The result is as shown in Figure 1a.

Next the slab is analyzed for bending in the Y direction (see Figure 1b). Once again we can see the effect of transverse variation of bending moment and flexural rigidity.

We can see the actual deformed shape of the panel in Figure 1c. The mid-panel deflection is the sum of the midspan deflection of the column strip in one direction and that of the middle strip in the other direction: i.e.,

$$\Delta_{\max} = \Delta_{cx} + \Delta_{my} \tag{1}$$

or

$$\Delta_{\max} = \Delta_{cy} + \Delta_{mx} \tag{2}$$

In calculations of the deformation of the slab panel in either direction, it is convenient first to assume that it deforms into a cylindrical surface, as it would if the bending moment at all sections were uniformly distributed across the panel width and if lateral bending of the

panel were suppressed. We consider that the supports to be fully fixed against both rotation and vertical displacement at this stage. Thus, a *reference deflection* is computed:

$$\Delta_{f,ref} = \frac{wl^4}{384 E_c I_{frame}} \tag{3}$$

where w is the load per foot along the span of length l and I_{frame} is the moment of inertia of the full-width panel (Figure 3a) including the contribution of the column-line beam or drop panels and column capitals if present.

The effect of the actual moment variation across the width of the panel and the variation of stiffness due to beams, variable slab depth, etc., are accounted for by multiplying the reference deflection by the ratio of M/E for the respective strips to that of the full-width frame:

$$\Delta_{f,col} = \Delta_{f,ref} \frac{M_{col}}{M_{frame}} \frac{E_c I_{frame}}{E_c I_{col}} \tag{4}$$

and

$$\Delta_{f,mid} = \Delta_{f,ref} \frac{M_{mid}}{M_{frame}} \frac{E_c I_{frame}}{E_c I_{mid}} \tag{5}$$

The subscripts relate the deflection Δ, the bending moment *M*, or the moment of inertia *I* to the full-width frame, column strip, or middle strip, as shown in Figure 3a,b, and c respectively.

Note that the moment ratios M_{mid} / M_{frame} and M_{col} / M_{frame} are identical to the lateral moment-distribution factors for DDM (ACI 13.6.4.1-3).

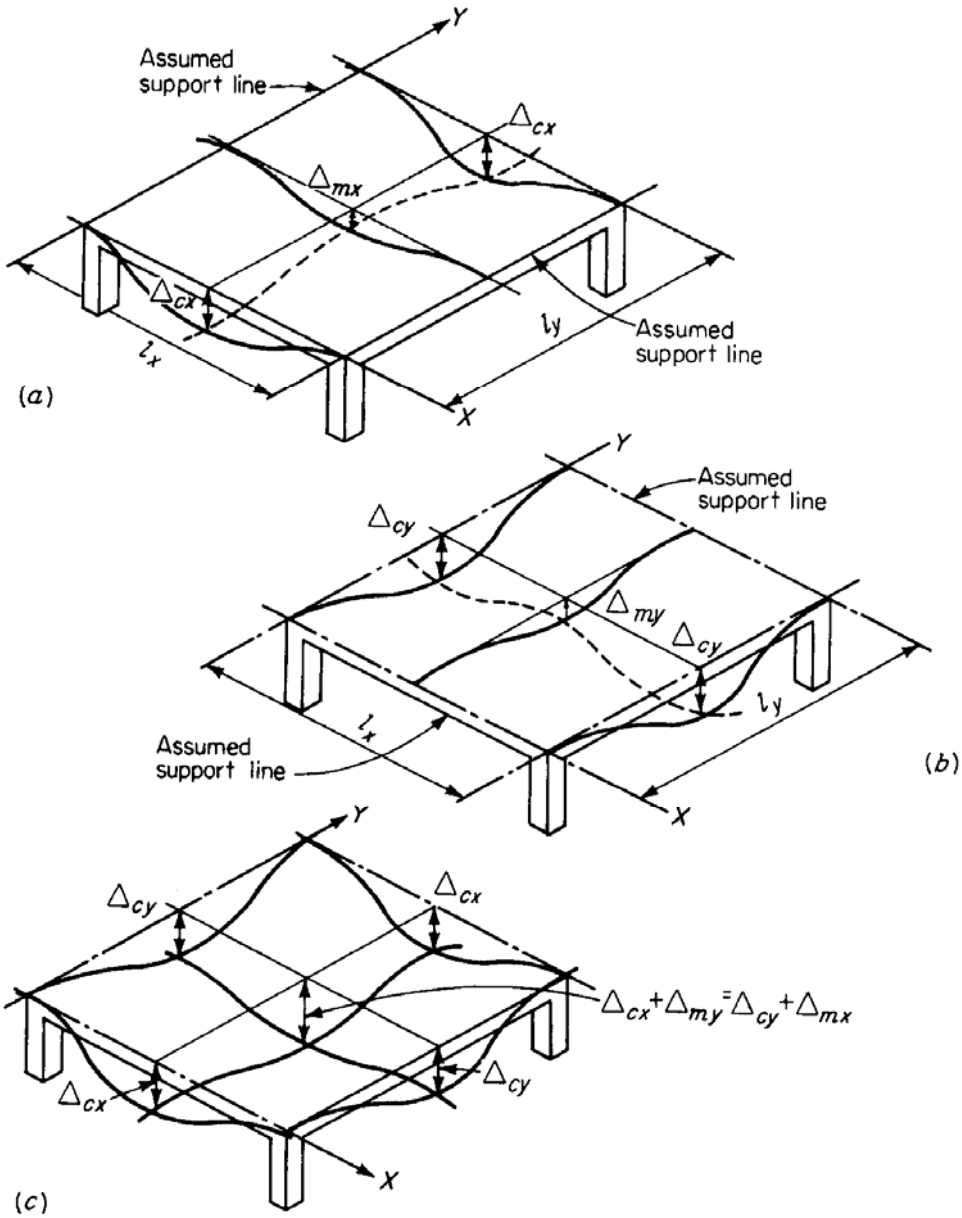

Figure 1. Basis of Equivalent Frame Method Deflection Analysis: (a) X-direction Bending; (b) Y-Direction Bending; and (c) Combined Bending (From Nilson).

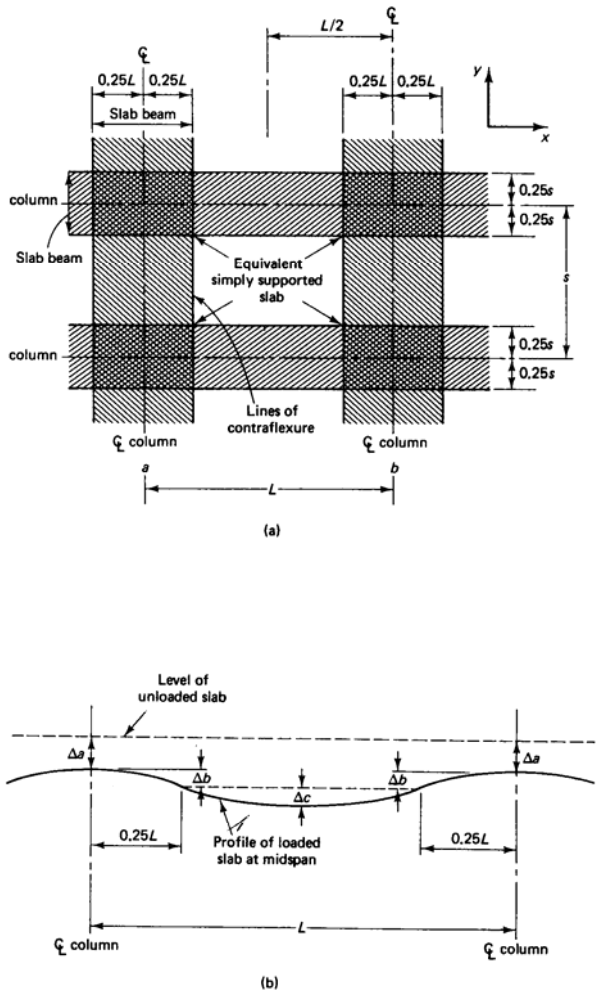

Figure 11.24 Equivalent frame method for deflection analysis: (a) plate panel transferred into equivalent frames; (b) profile of deflected shape at center line; (c) deflected shape of panel.

Figure 2. Equivalent Frame Method Deflection Analysis: (a) Plate Panel Trasfered into Equivalent Frames; (b) Profile of Deflected Shape at Centerline (From Nawy).

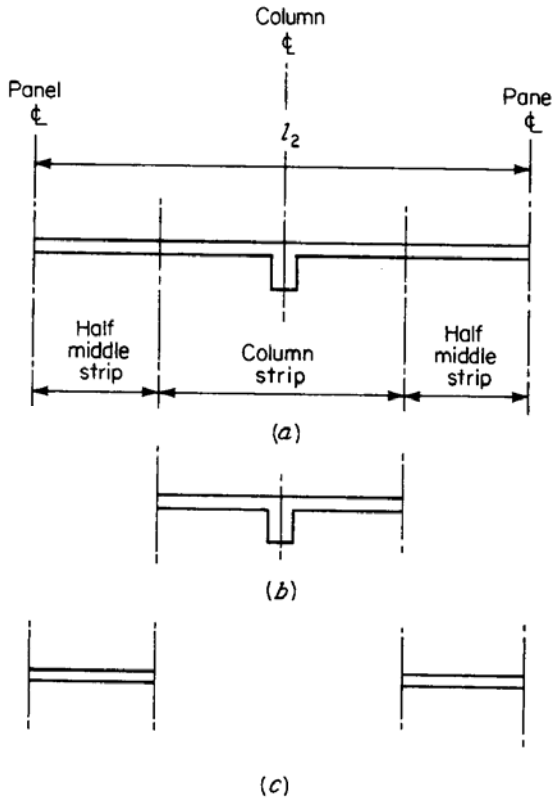

Figure 3. Effective Cross Sections for Deflection Calculations; (a) Full-Width Frame; (b) Column Strip; (c) Middle Strips.

The presence of drop panels or column capitals in the column strip of a flat slab floor rquires consideration of variation of moment of inertia in the span direction as shown in Figure 4 below.

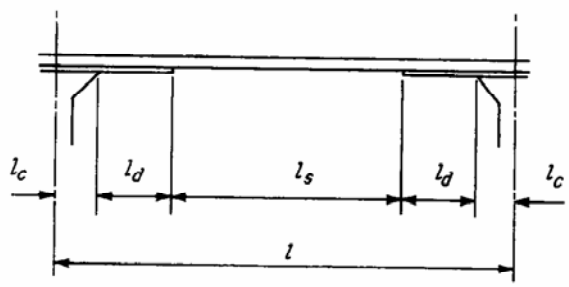

Figure 4. Flat Slab Span with Variable Moment of Inertia.

Nilson and Walters (1975) suggested a weighted average moment of inertia be used in such cases:

$$I_{ave} = 2\frac{l_c}{l}I_c + 2\frac{l_d}{l}I_d + \frac{l_s}{l}I_s \tag{6}$$

where:

I_c	=	moment of inertia of slab including both drop panel and capital
I_d	=	moment of inertia of slab with drop panel only
I_s	=	moment of inertia of slab alone

We also need to correct for the rotations of the equivalent frame at the supports, which until now we have assumed to be fully fixed. If the ends of the columns are considered fixed at the floor above and below, the rotation of column at the floor is:

$$\theta = \frac{M_{net}}{K_{ec}} \tag{7}$$

where

θ	=	angle change, radians
M_{net}	=	difference in floor moments to left and right of column
K_{ec}	=	stiffness of equivalent column.

Once we know the rotation, the associated mid-span deflection of the Equivalent Frame can be calculated. The midspan deflection of of a member experiencing an end rotation of θ radian having the far end fixed is:

$$\Delta_{\theta} = \frac{\theta l}{8} \tag{8}$$

Therefore, the total deflection at mid-span of the column strip or middle strip is the sum of three parts:

$$\Delta_{col} = \Delta_{f,col} + \Delta_{\theta l} + \Delta_{\theta r} \tag{9}$$

and

$$\Delta_{mid} = \Delta_{f,mid} + \Delta_{\theta l} + \Delta_{\theta r} \tag{10}$$

where the subscripts *l* and *r* refer to the left and right ends of the span respectively.

Example Problem (From Nilson's Book).

Find the deflections at the center of typical exterior panel of the two-way slab floor system designed before (shown below), due to dead load and live loads. The live load may be considered a short-term load and will be distributed uniformly over all panels. The floor will support non-structural elements that are likely to be damaged by large deflections. Take E_c = 3,600 ksi.

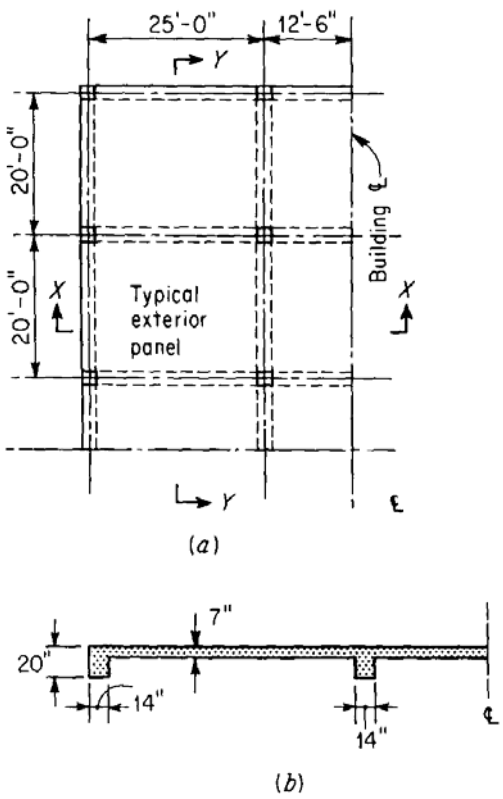

FIGURE 13.9
Two-way slab floor with beams on column lines: (*a*) partial floor plan; (*b*) section *X-X* (section *Y-Y* similar).

Solution. The elastic deflection due to the self-weight of 88 psf will be found, after which the additional long-term dead load deflection can be found by applying the factor $\lambda = 3.0$, and the short-term live load deflection due to 125 psf by direct proportion.

The effective concrete cross sections, upon which moment-of-inertia calculations will be based, are shown in Fig. 13.28 for the full-width frame, the column strip, and the middle strips, for the short-span and long-span directions. Note that the width of the column strip in both directions is based on the shorter panel span, according to the ACI Code. The values of moment of inertia are as follows:

	Short direction	**Long direction**
I_{frame}	27,900 in^4	25,800 in^4
I_{col}	21,000 in^4	21,000 in^4
I_{mid}	5,150 in^4	3,430 in^4

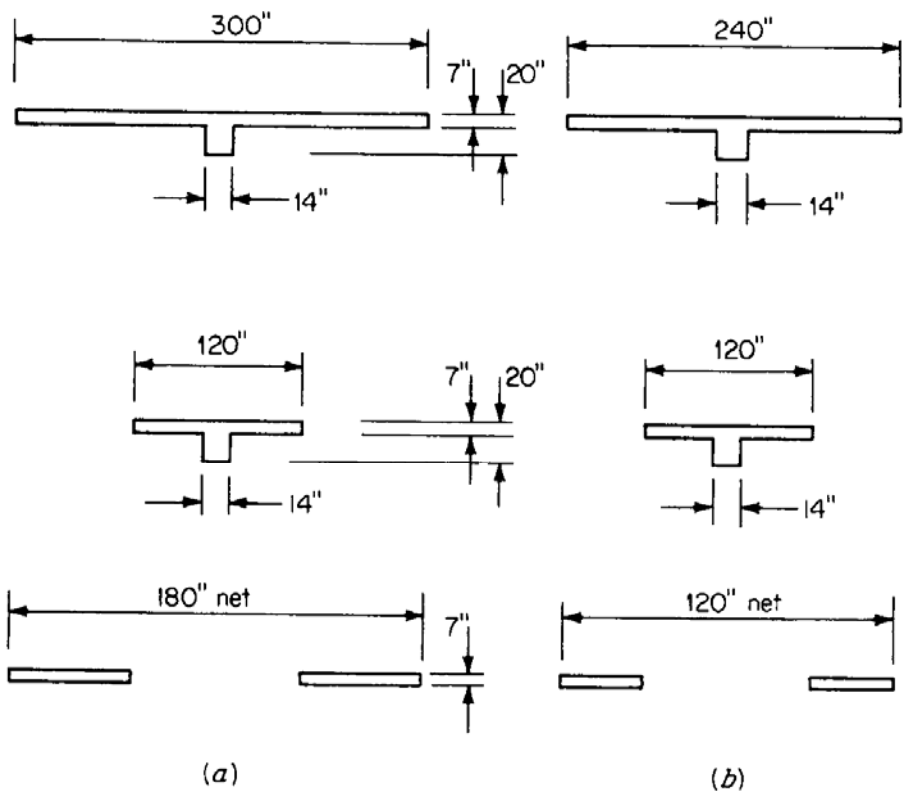

FIGURE 13.28
Cross-sectional dimensions for deflection example: (*a*) short-span direction frame, column strip, and middle strip; (*b*) long-span direction frame, column strip, and middle strip.

First calculating the deflection of the floor in the short-span (N-S) direction of the panel ($l_2 = 25$ ft), from the Equation (3):

$$\Delta_{f,ref} = \frac{wl^4}{384E_cI_{frame}} = \frac{(88/12)(25)(20\times12)^4}{384(3,600,000)(27,900)} = 0.016 \text{ in} \tag{11}$$

Note that we used the centerline span distance, although we used clear span for moment analysis. From the moment analysis in the short-span direction, we found that 68% of the moment both negative and positive sections was taken by the column strip and 32% by the middle strips. Therefore, from Equation (4) and(5) we have:

$$\Delta_{f,col} = \Delta_{f,ref}\frac{M_{col}}{M_{frame}}\frac{E_cI_{frame}}{E_cI_{col}} = 0.016\times0.68\times\frac{27,900}{21,000} = 0.014 \text{ in}$$

and

$$\Delta_{f,mid} = \Delta_{f,ref}\frac{M_{mid}}{M_{frame}}\frac{E_cI_{frame}}{E_cI_{mid}} = 0.016\times0.32\times\frac{27,900}{5150} = 0.028 \text{ in}$$

For the panel under consideration, which is fully continuous over both supports in the short direction, we can assume that support reactions are negligible; and therefore,

$$\Delta_{\theta l} = \Delta_{\theta r} = 0 \text{ in}$$

Therefore,

$$\Delta_{col} = \Delta_{f,col} + \Delta_{\theta l} + \Delta_{\theta r} = 0.014 \text{ in}$$

and

$$\Delta_{mid} = \Delta_{f,mid} + \Delta_{\theta l} + \Delta_{\theta r} = 0.028 \text{ in}$$

Now calculating the deformation in the long direction (E-W):

$$\Delta_{f,ref} = \frac{wl^4}{384E_cI_{frame}} = \frac{(88/12)(20)(25\times12)^4}{384(3,600,000)(25,800)} = 0.033 \text{ in}$$

From the moment analysis it was found that the column strip would take 93% of the exterior negative moment, 81% of the positive moment, and 81% of the interior negative moment. Therefore, the average lateral distribution factor for the column strip is:

$$\left(\frac{93+81}{2}+81\right)\frac{1}{2}=0.84$$

or 84%, while the middle strips are assigned 16%, therefore,

$$\Delta_{f,col}=\Delta_{f,ref}\frac{M_{col}}{M_{frame}}\frac{E_cI_{frame}}{E_cI_{col}}=0.033\times0.84\times\frac{25,800}{21,000}=0.0034\ \text{in}$$

and

$$\Delta_{f,mid}=\Delta_{f,ref}\frac{M_{mid}}{M_{frame}}\frac{E_cI_{frame}}{E_cI_{mid}}=0.033\times0.16\times\frac{25,800}{3430}=0.040\ \text{in}$$

We cannot ignore the rotation at the exterior column. The full static moment due to dead load is:

$$M_0=\frac{1}{8}\times0.088\times20\times25^2=137.5\ \text{ft-kips}$$

We found that 16% of the static moment, or 22 ft-kips should be assigned to the exterior support section. The resulting (assuming that from Equivalent Frame analysis we have the equivalent column stiffness as 169E.

$$\theta=\frac{M_{net}}{K_{ec}}=\frac{22,000\times12}{169\times3,600,000}=0.00043\ \text{rad}$$

From Equation (8) we have:

$$\Delta_\theta=\frac{\theta l}{8}=\frac{0.00043\times(25\times12)}{8}=0.016\ \text{in}$$

Therefore,

$$\Delta_{col}=\Delta_{f,col}+\Delta_{\theta l}+\Delta_{\theta r}=0.034+0.016=0.050\ \text{in}$$

and

$$\Delta_{mid} = \Delta_{f,mid} + \Delta_{\theta l} + \Delta_{\theta r} = +0.040 + 0.016 = 0.056 \text{ in}$$

The short-term mid-span deflection due to self-weight is

$$\Delta_{\max} = 0.05 + 0.028 = 0.078 \text{ in}$$

The long term deflection due to dead load is

$$\Delta_{long\ term} = 3.0 \times 0.078 = 0.234 \text{ in}$$

The short term live load deflection is

$$\Delta_{long\ term}^{live\ load} = \frac{125}{88} 0.078 = 0.111 \text{ in}$$

The ACI code limiting value for the present case is found to be 1/480 times the span, or

$$\Delta_{\text{limit}} = \frac{20 \times 12}{480} = 0.500 \text{ in}$$

based on the sum of the long-time delfectin due to sustained load and the immediate deflection due to live load. The sum of these deflection components in the present case is

$$\Delta_{\max} = 0.234 + 0.111 = 0.345 \text{ in}$$

which is less than the permissible value of 0.500 inches.