BEAM DESIGN

In order to be able to design beams, we need both moments and shears.

1. Moment

a) From direct design method or equivalent frame method

b) From loads applied directly to beams including beam weight

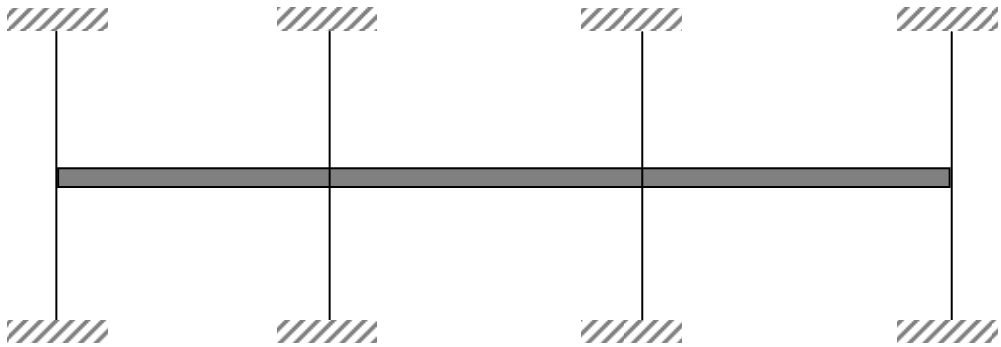

or max $M_{bm} = W_{bm}\, l_n^2 \;/10$ **ACI 8.3.3**

2. Shear

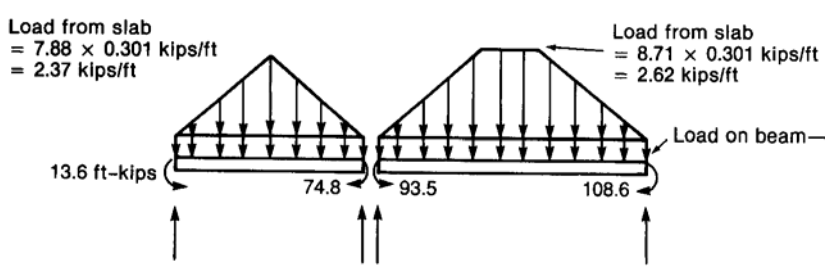

what to use for loads?

ACI 13.6.8 (see next page)

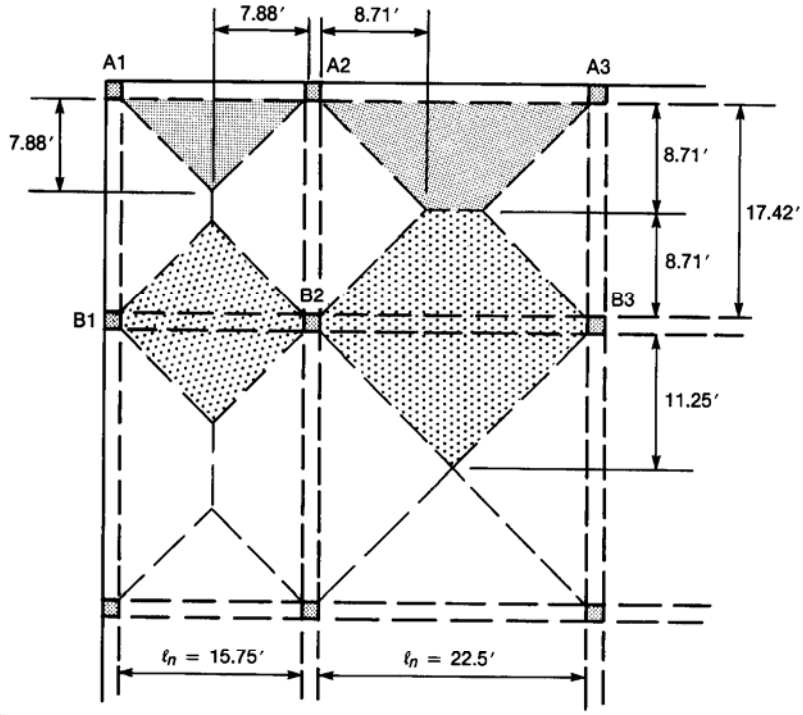

(a) Tributary areas for beams along lines A and B.

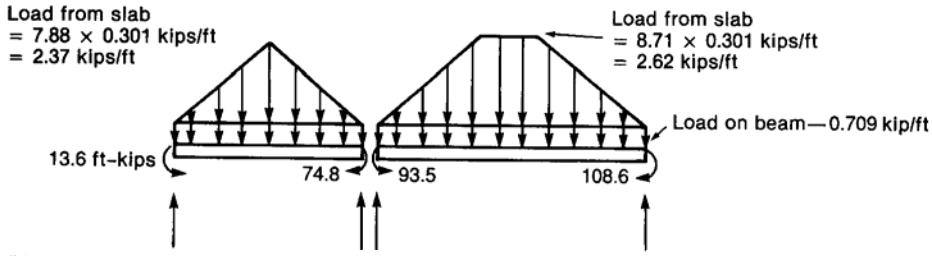

(b) Loads on beams along line A.

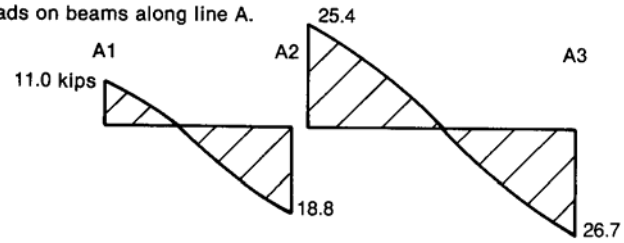

(c) Shear force diagrams for beams along line A.

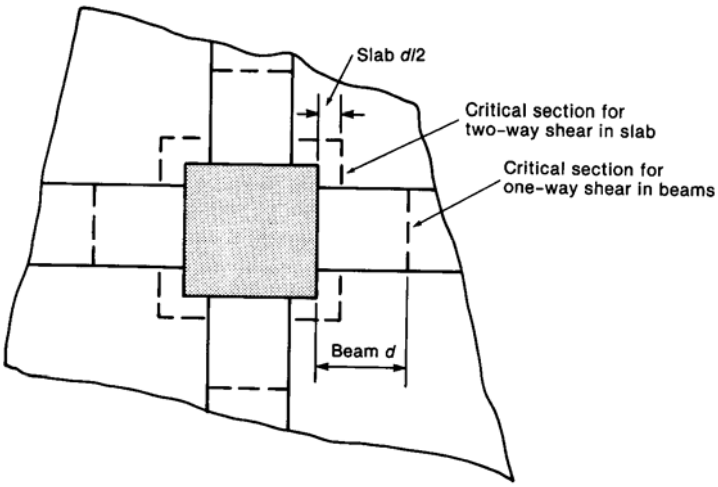

Figure 2. Shear Perimeter in Slabs with Beams. (MacGregor 1997).

Without Beams, Flat Plates and Flat Slabs

Tests of flat plate structures indicate that in most practical cases, the capacity is governed by shear.

Two types of shear may be critical in the design of the flat slabs:

1) Beam type shear leading to diagonal tension failure. (long narrow slabs).
A potential diagonal crack extends in a plane across the entire width l_2 of the slab.

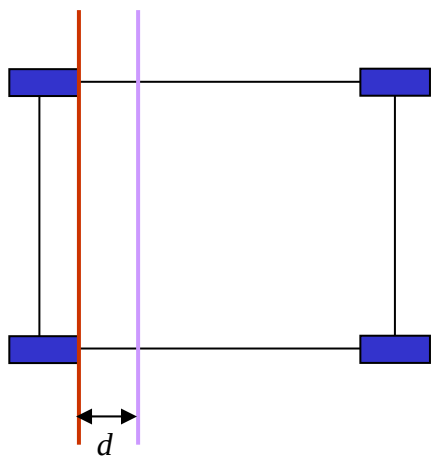

Critical section
a distance "*d*" from the face of column or capital.

$V_u \leq \phi V_c$ or else shear reinforcement is required

$$V_c = 2\sqrt{f_c'}\, l_2 d \qquad \text{Eq. 11-3 of ACI}$$

$$V_c = (1.9\sqrt{f_c'} + 2500\, V_u / M_u)\, l_2 \mathrm{d} \leq 3.5\sqrt{f_c'}\, l_2\, d \qquad \text{Eq. 11-5 of ACI}$$

1.(a). Exterior Columns

When design is carried out using the Direct Design Method, ACI Sec. 13.6.3.6 specifies that the moment that is transferred from a slab to an edge column is $0.3M_0$. This moment is used to compute the shear stresses due to moment transfer to the edge column, as shown in Sec. 13-8. Although the ACI Code does not specifically state, this moment can be assumed to be about the centroid of the shear perimeter. The exterior negative moment from the Direct Design Method calculation is divided between the columns above and below the slab in proportion to the column stiffnesses, $4EI/l$. The resulting column moments are used in the design of the columns.

2.(b). Interior Columns

At interior columns, the moment transfer calculations and the total moment used in the design of the columns above and below the floor are based on an unbalanced moment resulting from an uneven distribution of live load. The unbalanced moment is computed assuming that the longer span adjacent to the column is loaded with the factored dead load and half the factored live load, while the shorter span carries only the factored dead load. The total unbalanced negative moment at the joint is thus

$$M = 0.65\left[\frac{\left(w_d + 0.5w_l\right)l_2 l_n^2}{8} - \frac{w_d' \, l_2' l_n'^2}{8}\right]$$

where w_d and w_l refer to the factored dead and live loads on the longer span and $w_d', l_{2,}'$ and l_n' refer to the shorter span adjacent to the column. The factor 0.65 is the fraction of the static moment assigned to the negative moment at an interior support. The factors 0.65 and 1/8 combine to give 0.081. A portion of the unbalanced moment is distributed to the slabs, and the rest goes to the columns. Since slab stiffnesses have not been calculated, it is assumed that most of the moment is transferred to the columns, giving

$$M_{col} = 0.07\left[\left(w_d + 0.5w_l\right)l_2 l_n^2 - w_d' \, l_2' \left(l_n'\right)^2\right] \quad \text{(ACI Eq. 13-4)}$$

The moment, M_{col}, is used to design the slab-to-column joint. It is distributed between the columns above and below the joint in the ratio of their stiffnesses to determine the moments used to design the columns.

2. SHEAR DESIGN IN FLAT PLATES AND FLAT SLABS

When two-way slabs are supported directly by columns, as in flat slabs and flat plates, or when slabs carry concentrated loads, as in footings, shear near the columns is of critical importance. Tests of flat plate structures indicate that, in most practical cases, the capacity is governed by shear.

a. Slabs without Special Shear Reinforcement

Two kinds of shear may be critical in the design of flat slabs, flat plates, or footings. The first is the familiar beam-type shear leading to diagonal tension failure. Applicable particularly to long narrow slabs or footings, this analysis considers the slab to act as a wide beam, spanning between supports provided by the perpendicular column strips. A potential diagonal crack extends in a plane across the entire width 12 of the slab. The critical section is taken a distance *d* from the face of the column or capital. As for beams, the design shear strength (ϕV, must be at least equal to the required strength V_u at factored loads. The nominal shear strength V_c should be calculated by

$$V_c = 2\sqrt{f_c'}b_w d$$

with $b_w = l_2$ in this case.

Alternatively, failure may occur by *punching shear*, with the potential diagonal crack following the surface of a truncated cone or pyramid around the column, capital, or drop panel, as shown in Fig. 13.14a. The failure surface extends from the bottom of the slab, at the support, diagonally upward to the top surface. The angle of inclination with the horizontal, θ (see Figure below), depends upon the nature and amount of reinforcement in the slab. It may range between about 20 and 45°. The critical section for shear is taken perpendicular to the plane of the slab and a distance *d*/2 from the periphery of the support, as shown. The shear force V_u to be resisted can be calculated as the total factored load on the area bounded by panel centerlines around the column less the load applied within the area defined by the critical shear perimeter, unless significant moments must be transferred from the slab to the column (see Sec. *3)*.

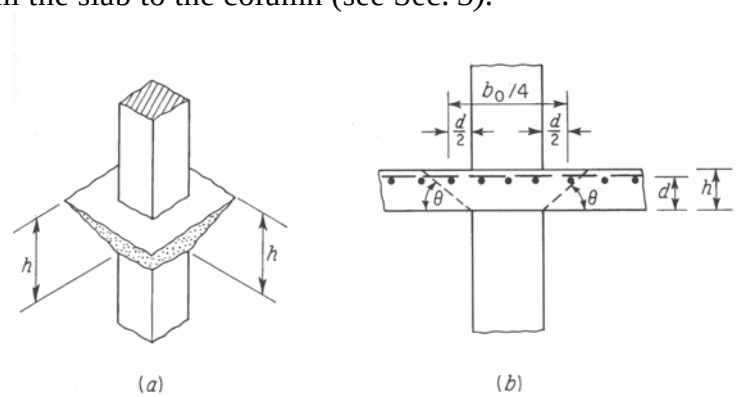

Figure 1. Failure surface defined by punching shear (Nilson's Book)

At such a section, in addition to the shearing stresses and horizontal compressive stresses due to negative bending moment, vertical or somewhat inclined compressive stress is present, owing to the reaction of the column. The simultaneous presence of vertical and horizontal compression increases the shear strength of the concrete. For slabs supported by columns having a ratio of long to short sides not greater than *2*, tests indicate that the nominal shear strength may be taken equal to

$$V_c = 4\sqrt{f_c'}b_0 d \qquad \text{ACI Eq. (11-35)}$$

according to ACI Code *11.12.2*, where b_o = the perimeter along the critical section.

However, for slabs supported by very rectangular columns, the shear strength predicted by Equation (11-35) has been found to be unconservative. The value of V_c approaches $2\sqrt{f_c'}b_0 d$ as β_c, the ratio of long to short sides of the column, becomes very large. Based on this, ACI Code 11.12.2 states further that V_c in punching shear shall not be taken greater than

$$V_c = \left(2 + \frac{4}{\beta_c}\right)\sqrt{f_c'}b_0 d \qquad \text{ACI Eq. (11-33)}$$

Further tests have shown that the shear strength V_c decreases as the ratio of critical perimeter to slab depth, bold, increases. Accordingly, ACI Code 11.12.2 states that V_c in punching shear must not be taken greater than

$$V_c = \left(2 + \frac{\alpha_s d}{b_0}\right)\sqrt{f_c'}b_0 d \qquad \text{ACI Eq. (11-34)}$$

where a_s *is 40* for interior columns, *30* for edge columns, and *20* for corner columns, i.e., columns having critical sections with *4*, *3*, or *2* sides, respectively.

The shear design strength is the smallest of three equations given above.

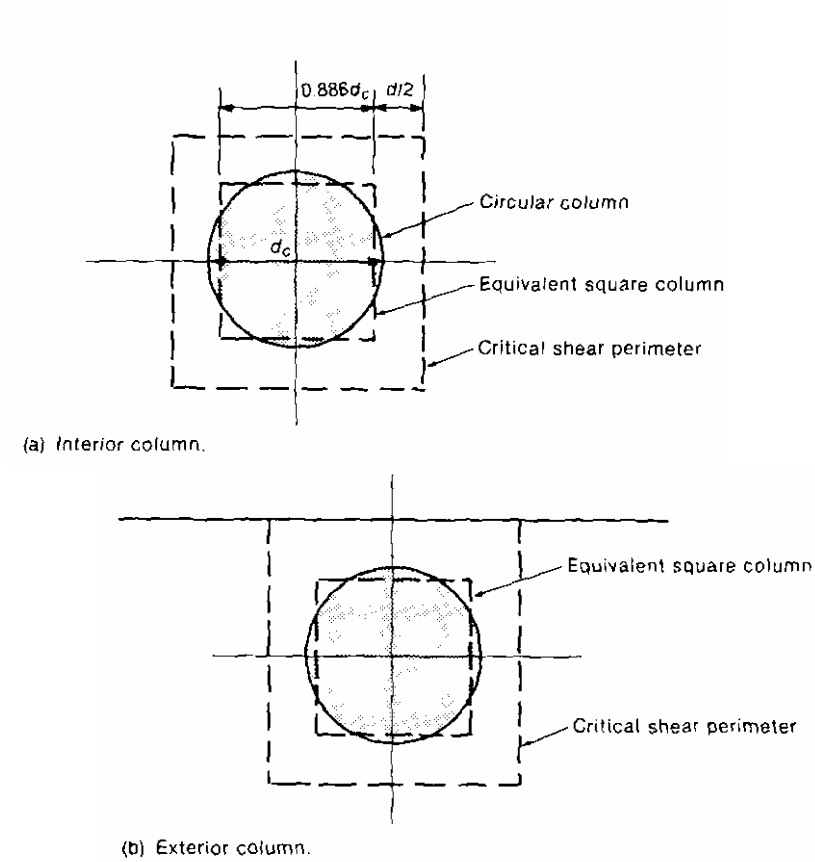
0.886d_c
$d/2$
Circular column
d_c
Equivalent square column
Critical shear perimeter
(a) Interior column.
Equivalent square column
Critical shear perimeter
(b) Exterior column.

Figure 2.

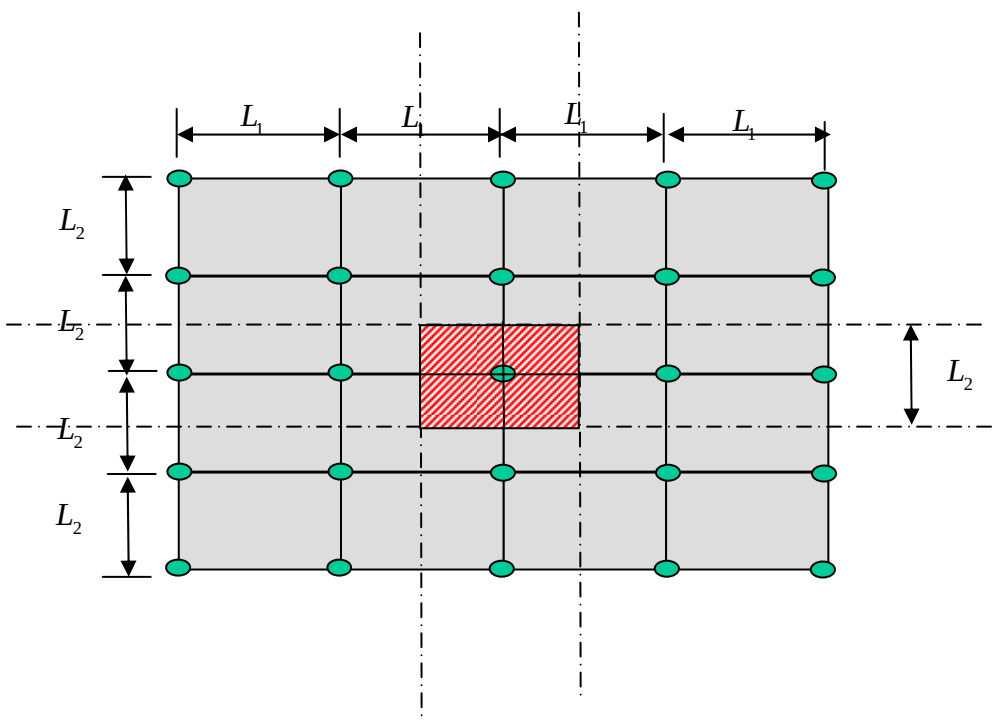
L_1
L_1
L_1
L_1
L_2
L_2
L_2
L_2
L_2

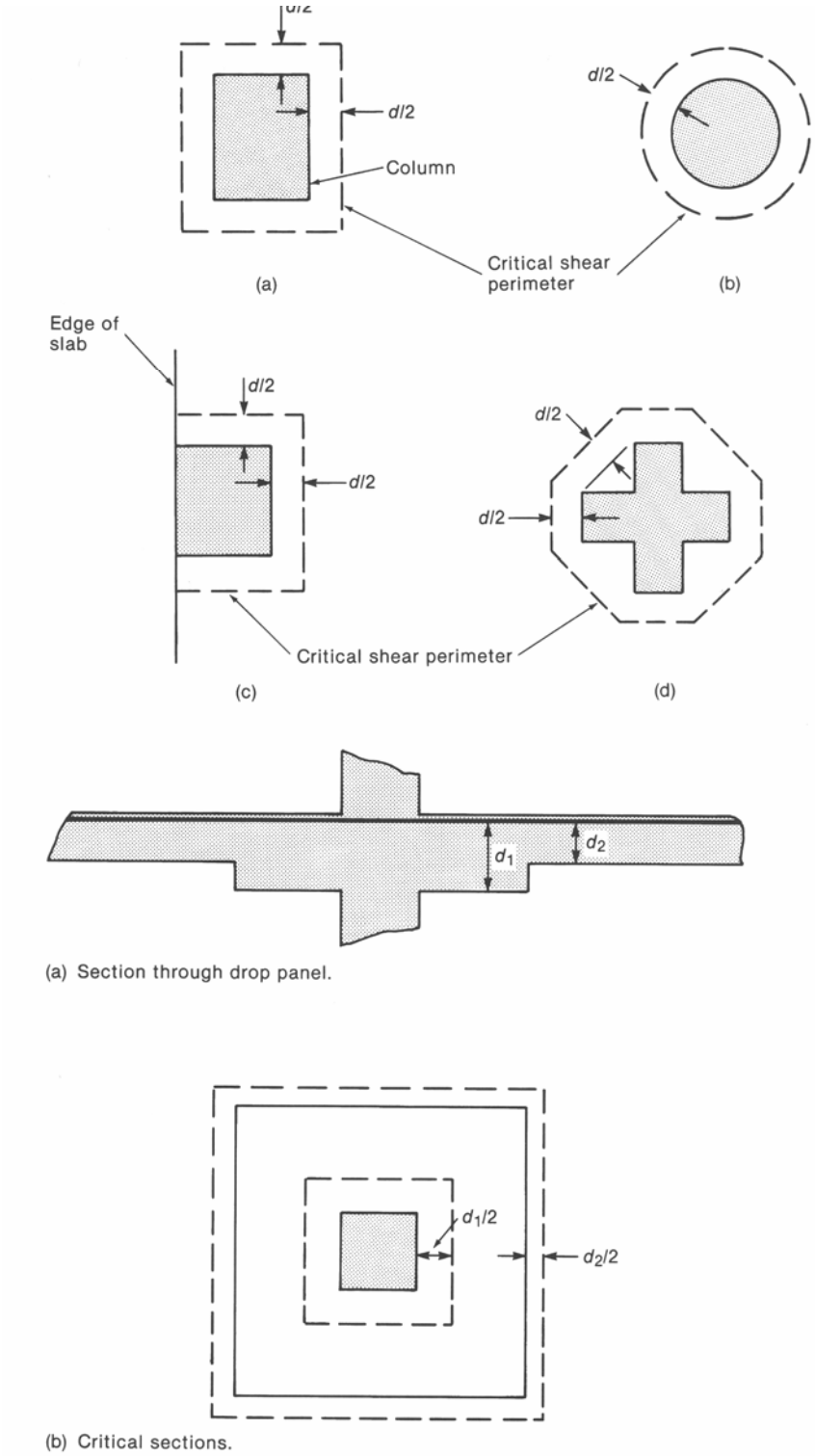

Figure 3. Failure surface defined by punching shear (KacGregor's Book)

3. TRANSFER OF MOMENTS AT COLUMNS

The analysis for punching shear in flat plates and flat slabs presented in Sec. 2 assumed that the shear force V_u was resisted by shearing stresses uniformly distributed around the perimeter b_o of the critical section, a distance $d/2$ from the face of the supporting column. The nominal shear strength V_c was given by Eqs. (11-33, 11-34, 11-35).

If significant moments are to be transferred from the slab to the columns, as would result from unbalanced gravity loads on either side of a column or from horizontal loading due to wind or seismic effects, the shear stress on the critical section is no longer uniformly distributed.

The situation can be modeled as shown in Figure 4. Here V_u represents the total vertical reaction to be transferred to the column, and M,, represents the unbalanced moment to be transferred, both at factored loads. The vertical force V_u causes shear stress distributed more or less uniformly around the perimeter of the critical section as assumed earlier, represented by the inner pair of vertical arrows, acting downward. The unbalanced moment M_u causes additional loading on the joint, represented by the outer pair of vertical arrows, which add to the shear stresses otherwise present on the right side, in the sketch, and subtract on the left side.

Tests indicate that for square columns about 60 percent of the unbalanced moment is transferred by flexure (forces T and C in Figure 4) and about 40 percent by shear stresses on the faces of the critical section. For rectangular columns, it is reasonable to suppose that the portion transferred by flexure increases as the width of the critical section that resists the moment increases, i.e., as $c_2 + d$ becomes larger relative to $c_1 + d$ in Figure 4. According to ACI Code 13.5.3, the moment considered to be transferred by flexure is

$$M_{ub} = \gamma_f M_u \qquad \text{ACI Eq. (13-1)}$$

where

$$\gamma_f = \frac{1}{1 + \frac{2}{3}\sqrt{b_1 / b_2}} M_u \qquad \text{ACI Eq. (13-1)}$$

while that assumed to be transferred by shear, by ACI Code 11.12.6, is

$$M_{uv} = \left[1 - \frac{1}{1 + \frac{2}{3}\sqrt{b_1 / b_2}} \right] M_u \qquad \text{ACI Eq. (13-)}$$

Please note:

Where:

$$b_1 = c_1 + d, \quad b_2 = c_2 + d \qquad \text{for Interior Column}$$

$$b_1 = c_1 + \frac{d}{2}, \quad b_2 = c_2 + d \qquad \text{for Edge Column}$$

$$b_1 = c_1 + \frac{d}{2}, \quad b_2 = c_2 + \frac{d}{2} \qquad \text{for Corner Column}$$

It is seen that for a square column these equations indicate that 60 percent of the unbalanced moment is transferred by flexure and 40 percent by shear, in accordance with the available data (see R11.12.6.1 page 184 of ACI). If c_2 is very large relative to c_1, nearly all the moment is transferred by flexure.

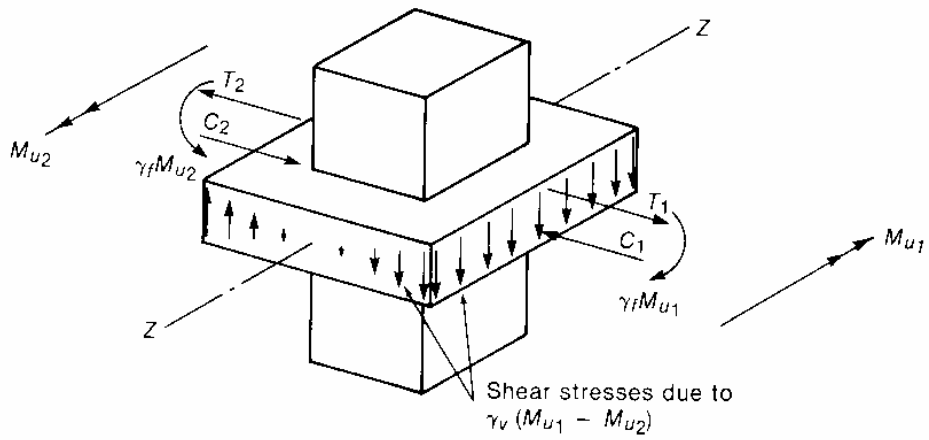

(a) Transfer of unbalanced moments to column.

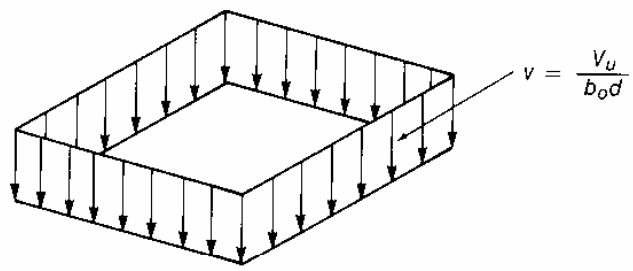

(b) Shear stresses due to V_u.

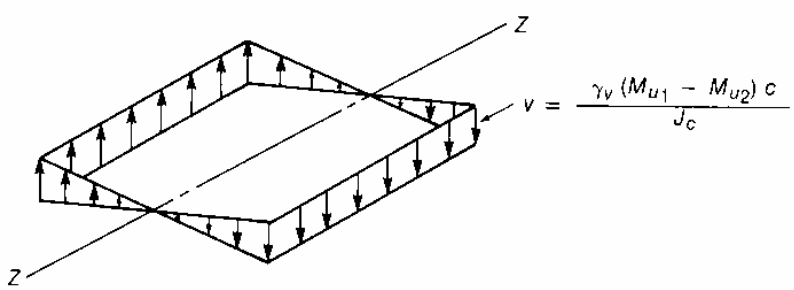

(c) Shear due to unbalanced moment.

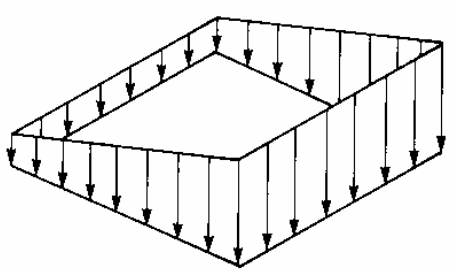

(d) Total shear stresses.

Figure 4.

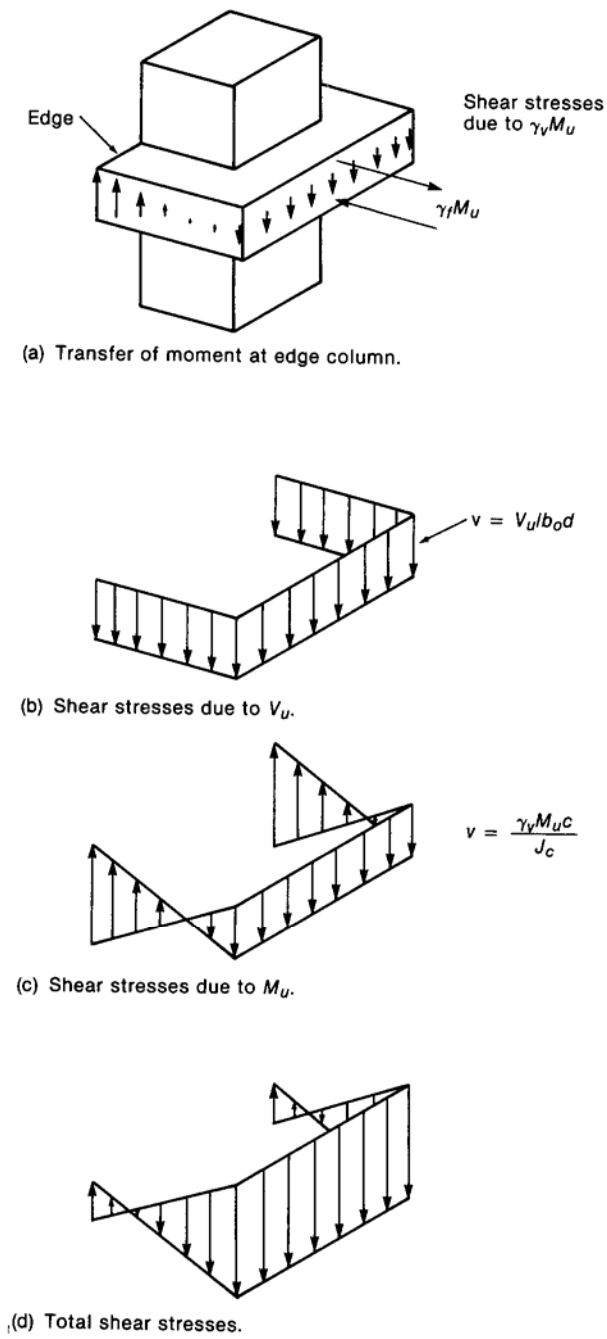
Edge
Shear stresses due to $\gamma_v M_u$
$\gamma_f M_u$
(a) Transfer of moment at edge column.
$v = V_u/b_o d$
(b) Shear stresses due to V_u.
$v = \frac{\gamma_v M_u c}{J_c}$
(c) Shear stresses due to M_u.
(d) Total shear stresses.

Figure 5.

ACI 13.5.3.

The moment M_{ub} can be accommodated by concentrating a suitable fraction of the slab column-strip reinforcement near the column. According to ACI Code *13.5.3,* this steel must be placed within a width between lines *1.5h* on each side of the column or capital, where h is the total thickness of the slab or drop panel.

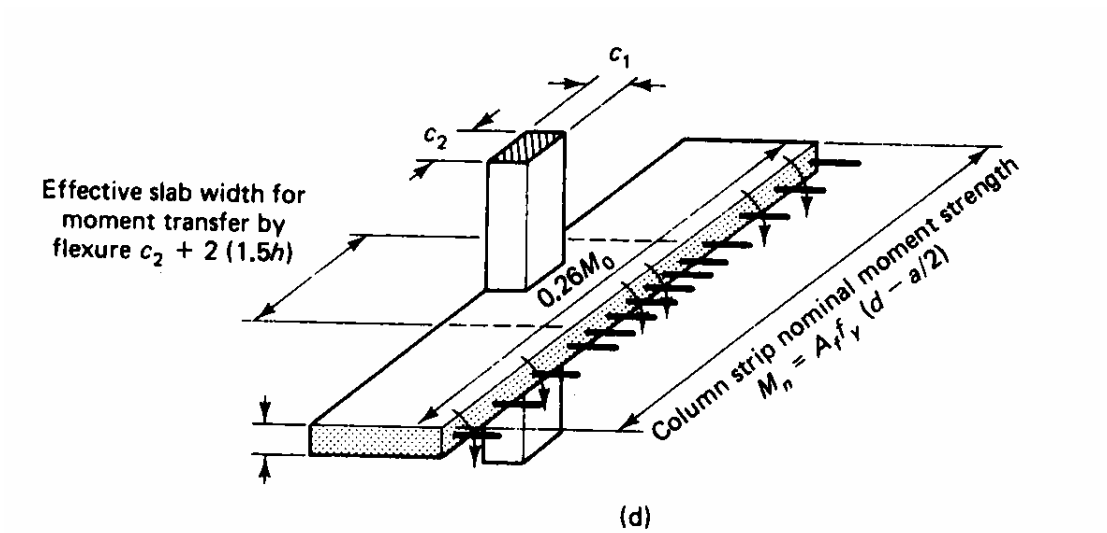

Figure 6. Shear Stress Distribution Around Column Edges – Transfer Nominal Moment Strength M_n.

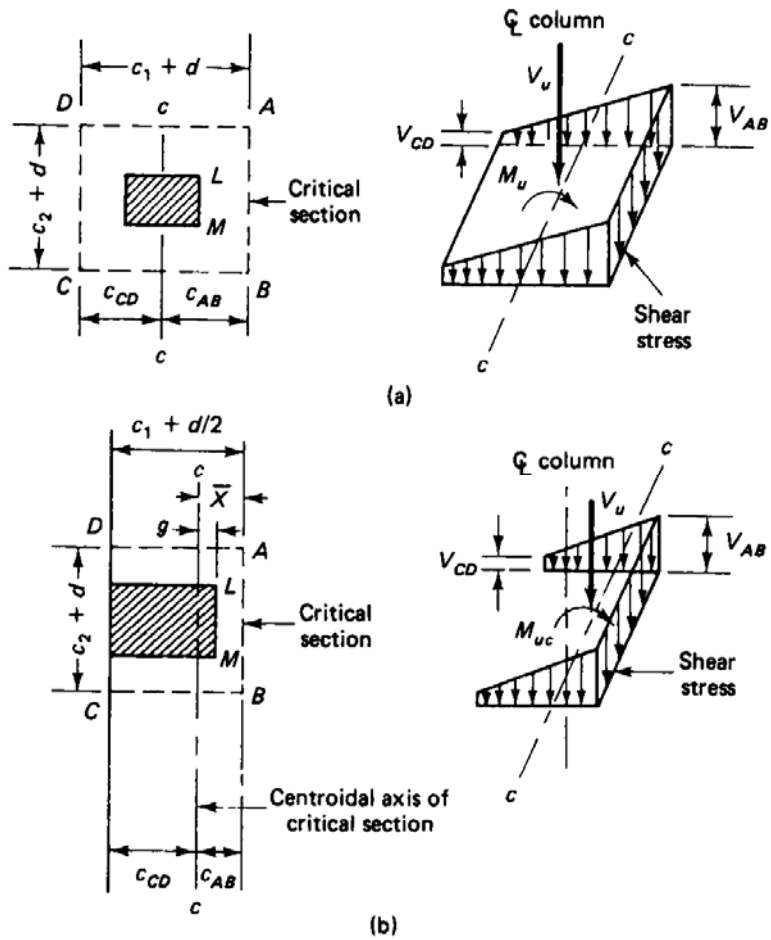

Figure 7. Shear Stress Distribution Around Column Edges: (a) Interior Column, (b) End Column (See ACI Page 186, Figure R11.12.6.2)

The moment M_{uv} together with the vertical reaction delivered to the column, causes shear stresses assumed to vary linearly with distance from the centroid of the critical section, as indicated for an interior column by Figure 4. The stresses can be calculated from

$$v_l = \frac{V_u}{A_c} - \frac{M_{uv} c_l}{J_c}$$ ACI R11.12.6.2 Page 184

$$v_r = \frac{V_u}{A_c} + \frac{M_{uv} c_r}{J_c}$$ ACI R11.12.6.2 Page 185

where

A_c = area of critical section = $2d\left[\left(c_1+d\right)+\left(c_2+d\right)\right]$

c_l, c_r = distances from centroid of critical section to left and right face of section respectively

J_c = property of critical section analogous to polar moment of inertia

The quantity J_c is to be calculated from

$$J_c = \frac{2d(c_1+d)^3}{12} + \frac{2(c_1+d)d^3}{12} + 2d(c_2+d)\left(\frac{c_1+d}{12}\right)^2 \qquad \text{ACI}$$

Note the implication, in the use of the parameter J_c in the form of a polar moment of inertia, that shear stresses indicated on the near and far faces of the critical section in Figure 4 have horizontal as well as vertical components.

According to ACI Code 11.12.6, the maximum shear stress calculated by Eq. (13-) must not exceed ϕv_n. For slabs without shear reinforcement, $\phi v_n = \phi V_c / b_0 d$, where V_c is the smallest value given by Eqs. (13-), (13-), or (13-). For slabs with shear reinforcement other than shearheads, $\phi v_n = \phi\ (V_c + V_S)/b_o d$.

ACI Code 13.5.3.3 permits some increase in the amount of unbalanced moment assumed to be transferred by flexure, with a corresponding decrease in the amount transferred by shear, provided that a specified reduction is made in the allowable shear capacity at that support.

Equations similar to those above can be derived for the edge columns shown in Figures 4 and 5 for a corner column. Note that although the centroidal distances cl and c_r are equal for the interior column, this is not true for the edge column of Fig. 4 or for a corner column.

According to ACI Code 13.6.3.6, when the direct design method is used, the moment to be transferred between slab and an edge column by shear is to be taken equal to $0.30M_o$, where M_o is found from Eq. (13.1). This is intended to compensate for assigning a high proportion of the static moment to the positive and interior negative moment regions according to Table 13.1, and to ensure that adequate shear strength is provided between slab and edge column, where unbalanced moment is high and the critical section width is reduced.

The application of moment to a column from a slab or beam introduces shear to the column also, as is clear from Fig. 13.24a. This shear must be considered in the design of lateral column reinforcement.

As was pointed out in Sec. 13.6, most flat plate structures, if they are overloaded, fail in the region close to the column, where large shear and bending forces must be 13.8

Example

Column Moments

Use Equivalent Frame Method – or get from analysis.

Exterior Column

- ACI 13.6.3. Table must be used
- The column supporting an edge beam must provide resisting moment equal to the applied from the edge of slab.

Interior Column

ACI Eq. 13-4 page 228 (Sect. 13.6.9.2):

$$M_{col} = 0.07\left[\left(w_d + 0.5w_l\right)l_2 l_n^2 - w_d' \, l_2' \left(l_n'\right)^2\right] \quad \text{(ACI Eq. 13-4)}$$

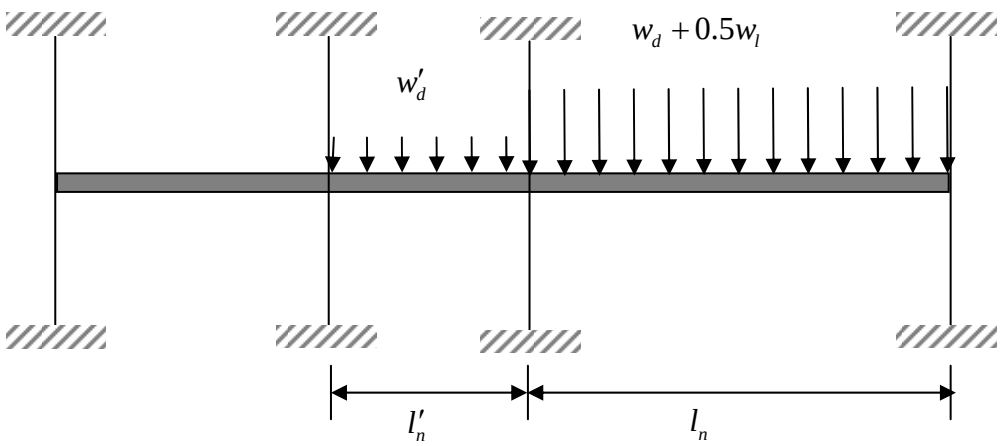

4. Openings in Slabs

Almost invariably, flab systems must include openings. These may be of substantial size, as required by stairways and elevator shafts, or they may be of smaller dimensions, such as those needed to accommodate heating, plumbing, and ventilating risers; floor and roof drains; and access hatches.

Relatively small openings usually are not detrimental in *beam-supported slabs.* As a general rule, the equivalent of the interrupted reinforcement should be added at the fides of the opening. Additional diagonal bars should be included at the corners to control the cracking that will almost inevitably occur there. The importance of small openings in *slabs supported directly by columns* (flat slabs and flat plates) depends upon the location of the opening with respect to the columns. From a structural point of view, they are best located away from the columns, preferably in the area common to the flab middle strips. Unfortunately, architectural and functional considerations usually cause them to be located close to the columns. In this cafe, the reduction in effective shear perimeter if the major concern, because such floors are usually shear-critical.

According to ACI Code 11.12.5, if the opening if close to the column (within 10 flab thicknesses or within the column strips), then that part of b_o included within the radial lines projecting from the opening to the centroid of the column should be considered ineffective. If shearheads (fee Sec. 13.6d) are used under such circumstances, the reduction in width of the critical section if found in the fame way, except that only one-half the perimeter included within the radial lines need be deducted.

With regard to flexural requirements, the total amount of steel required by calculation must be provided regardless of openings. Any steel interrupted by holes should be matched with an equivalent amount of supplementary reinforcement on either fide, properly lapped to transfer stress by bond. Concrete compression area to provide the required strength must be maintained; usually this would be restrictive only near the columns. According to ACI Code 13.4.2, openings of any size may be located in the area common to intersecting middle strips. In the area common to intersecting column strips, not more than one-eighth of the width of the column strip in either span can be interrupted by openings. In the area common to one middle strip and one column strip, not more than one-quarter of the reinforcement in either strip may be interrupted by the opening.

ACI Code 13.4.1 permits openings of *any* size if it can be shown by analysis that the strength of the flab if at least equal to that required and that all serviceability conditions, i.e., cracking and deflection limits, are met. The *strip method* of analysis and design for openings in slabs, by which specially reinforced integral beams, or *strong bands,* of depth equal to the flab depth are used to frame the openings, will be described in detail in Chapter 15. Very large openings should preferably be framed by beams or slab bands on increased depth to restore the continuity of the slab. The beams must be designed to carry a portion of the floor load, in addition to slab. The beams must be designed to carry a portion of the floor load, in addition to loads applied directly by partition walls, elevator support beams, or stair slabs.