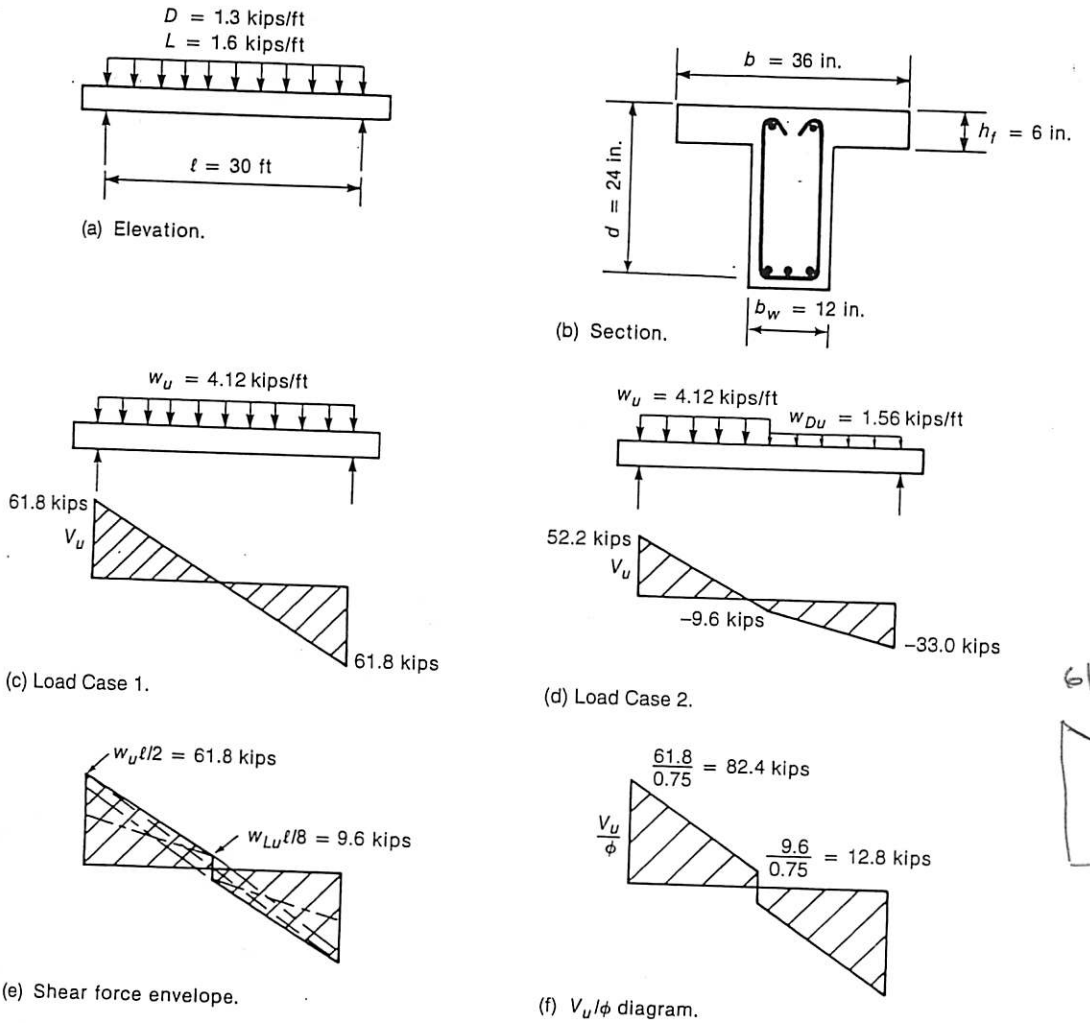

Fig. 6-34
Beam and shear force envelope—Example 6-1.

61.8

9.6

$y = ax + b$

$61.8 = 0 + b$

$9.6 = 15x + 61.8$

$\boxed{x = -3.48}$

EXAMPLE 6-1 Design of Vertical Stirrups in a Simply Supported Beam

Figure 6-34b shows the cross section of a simply supported T-beam. This beam supports a uniformly distributed service (unfactored) dead load of 1.3 kips/ft, including its own weight, and a uniformly distributed service live load of 1.6 kips/ft. Design vertical stirrups for this beam. The concrete is normal weight with a strength of 4000 psi, the yield strength of flexural reinforcement is 60,000 psi, and that of the stirrups is 40,000 psi. It is assumed that the longitudinal bars are properly detailed to prevent anchorage and flexural failures. A complete design example including these aspects is presented in Chapter 10. Use load and resistance factors from ACI Code Sections 9.2.1 and 9.3.2.3.

1. Compute the factored shear-force envelope. From ACI Eq. (9.2) with F, T, H, L_r, S, and R all equal to zero, the total factored load is:

$$w_u = 1.2 \times 1.3 \text{ kips/ft} + 1.6 \times 1.6 \text{ kips/ft}$$
$$= 4.12 \text{ kips/ft}$$

Factored dead load:

$$w_{Du} = 1.2 \times 1.3 \text{ kips/ft} = 1.56 \text{ kips/ft}$$

Three loading cases should be considered: Fig. 6-34c, Fig. 6-34d, and the mirror opposite of Fig. 6-34d. The three shear-force diagrams are superimposed in Fig. 6-34e. For simplicity, we approximate the shear-force envelope with straight lines and design simply supported beams for $V_u = w_u\ell/2$ at the ends and $V_u = w_{Lu}\ell/8$ at midspan, where w_u is the total factored live and dead load and w_{Lu} is the factored live load (2.56 kips/ft). From Eq. (6-14),

$$V_u \leq \phi V_n$$

Setting these equal, we find that the smallest acceptable value of V_n is

$$V_n = \frac{V_u}{\phi}$$

Using $\phi = 0.75$, V_u/ϕ is plotted in Fig. 6-34f.

Because this beam is loaded on the top and supported on the bottom, the critical section for shear is located at $d = 2$ ft from the support. From Fig. 6-34f and similar triangles, the shear at d from the support is

$$\frac{V_u}{\phi} \text{ at } d = 82.4 \text{ kips} - \frac{2 \text{ ft}}{15 \text{ ft}}(82.4 - 12.8) \text{ kips}$$
$$= 73.1 \text{ kips}$$

Therefore,

$$\frac{V_u}{\phi} \text{ at } d = 73.1 \text{ kips and min. } V_n = 73.1 \text{ kips}$$

2. Are stirrups required by ACI Code Section 11.4.6.1? No stirrups are required if $V_u/\phi \leq V_c/2$, where

$$\begin{aligned} V_c &= 2\lambda\sqrt{f'_c}\,b_w d \\ &= 2 \times 1\sqrt{4000} \text{ psi} \times 12 \text{ in.} \times 24 \text{ in.} \\ &= 36{,}400 \text{ lbs} = 36.4 \text{ kips} \end{aligned} \tag{6-8b}$$

Because $V_u/\phi = 73.1$ kips exceeds $V_c/2 = 18.2$ kips, stirrups are required.

3. Is the cross section large enough? ACI Code Section 11.4.7.9 gives the maximum shear in the stirrups as

$$V_{s,\max} = 8\sqrt{f'_c}\,b_w d$$

Thus, in this case the maximum V_u/ϕ is

$$\begin{aligned} (V_u/\phi)_{\max} &= V_c + V_{s,\max} = 10\sqrt{f'_c}\,b_w d = 5V_c \\ &= 182 \text{ kips} \end{aligned}$$

Because V_u/ϕ at $d = 73.1$ kips is less than 182 kips, the section is large enough.

Because this is a tight spacing for a beam with a total depth exceeding 24 in., switch to No. 4 double-leg stirrups ($A_v = 2 \times 0.20 \text{ in.}^2 = 0.40 \text{ in.}^2$). The required spacing for strength is:

$$s \leq \frac{0.40 \text{ in.}^2 \times 40 \text{ ksi} \times 24 \text{ in.}}{73.1 \text{ k} - 36.4 \text{ k}} = 10.5 \text{ in.}$$

This is a reasonable result, so use No. 4 double-leg stirrups at a spacing of 10 in. near the support. However, it normally is assumed that each stirrup reinforces a length of beam extending $s/2$ on each side of the stirrup. For this reason, the first stirrup should be placed at $s/2 = 5$ in. from the face of the support.

We now will find the point where we can change to No. 3 double-leg stirrups ($A_v = 0.22 \text{ in.}^2$) at the maximum permissible spacing of 12 in. The selection of more intermediate stirrup size and spacing combinations is up to the designer. Generally, no more that three different size/spacing combinations are used in a beam.

Using No. 3 double-leg stirrups at 12 in., from Eq. (6-18) we have

$$V_s = \frac{A_v f_{yt} d}{s} = \frac{0.22 \text{ in.}^2 \times 40 \text{ ksi} \times 24 \text{ in.}}{12 \text{ in.}} = 17.6 \text{ kips}$$

Then, using Eq. (6-9),

$$V_n = V_c + V_s = 36.4 \text{ k} + 17.6 \text{ k} = 54.0 \text{ kips}$$

Setting $V_n = V_u/\phi = 54.0$ kips and using similar triangles from the shear envelope in Fig. 6-34f, it can be shown that this shear occurs at

$$x_1 = \frac{82.4 \text{ k} - 54.0 \text{ k}}{82.4 \text{ k} - 12.8 \text{ k}} \times 15 \text{ ft}$$

$$= 6.12 \text{ ft} = 73.4 \text{ in. (from center of support)}$$

Stirrups must be continued to the point where $V_u/\phi = V_c/2 = 18.2$ kips. Using similar triangles from Fig. 6-34f, this shear occurs at

$$x_2 = \frac{82.4 \text{ k} - 18.2 \text{ k}}{82.4 \text{ k} - 12.8 \text{ k}} \times 180 \text{ in.}$$

$$= 166 \text{ in. (from center of the support)}$$

To finalize the stirrup design for this beam, we will assume the beam rests on a 6-in. bearing plate. The first No. 4 stirrup must be placed 5 in. from the edge of the bearing plate (a total of 8 in. from the center of the support). Then use seven more No. 4 stirrups at a 10-in. spacing (extends to 78 in. from the center of the support). After that, use eight No. 3 stirrups at a 12-in. spacing (extends to 174 in. from center of support). By coincidence, the last stirrup is only 6 in. from the midspan of the beam, and thus only 12 in. from the next No. 3 stirrup that will be placed symmetrically in the other half of the beam span. For other beam designs there may be a larger region near the midspan of a beam where no stirrups are required to satisfy the ACI Code requirements. It is the designer's option to put stirrups in that region either for enhanced shear strength or to hold longitudinal reinforcement in the proper position. The final stirrup design, as measured from the face of the support plate is

4. Check the anchorage of stirrups and maximum spacing. Try No. 3 double-leg stirrups, $f_{yt} = 40{,}000$ psi:

$$A_v = 2 \times 0.11 \text{ in.}^2 = 0.22 \text{ in.}^2$$

(a) Check the anchorage of the stirrups. Because the bar size of the stirrups is less than No. 6, ACI Code Section 12.13.2.1 states that such stirrups can be anchored by a 90° or 135° stirrup hook around a longitudinal bar. Provide a No. 4 bar in the upper corners of the stirrups to anchor them.

(b) Find the maximum stirrup spacing.

Based on the beam depth: ACI Code Section 11.4.5.1 sets the maximum spacing as the smaller of $0.5d = 12$ in. or 24 in. ACI Code Section 11.4.5.3 requires half this spacing in regions where V_s exceeds $4\sqrt{f'_c}\, b_w d$. Thus, the stirrup spacing must be cut in half if V_u/ϕ exceeds

$$V_c + 4\sqrt{f'_c}\, b_w d = 6\sqrt{f'_c}\, b_w d = 109 \text{ kips}$$

Max $\frac{V_u}{\phi} = 82.4$

Because the maximum V_u/ϕ is less than 109 kips, the maximum spacing based on the beam depth is $s = 12$ in.

Based on minimum A_v in Eq. (6-24),

ACI 11.4.6.3
page 172

$$A_{v,\min} = 0.75\sqrt{f'_c}\frac{b_w s}{f_{yt}} \tag{6-24}$$

but not less than

$$A_{v,\min} = \frac{50 b_w s}{f_{yt}} \tag{6-25}$$

Because $0.75\sqrt{f'_c} = 47.4$ psi < 50 psi, Eq. (6-25) governs. Rearranging Eq. (6-25) gives

$$s_{\max} = \frac{A_v f_{yt}}{50 b_w}$$

$$= \frac{0.22 \text{ in.}^2 \times 40{,}000 \text{ psi}}{50 \text{ psi} \times 12 \text{ in.}} = 14.7 \text{ in.}$$

Therefore, the maximum spacing based on the beam depth governs. **Maximum s = 12 in.**

5. Compute the stirrup spacing required to resist the shear forces. For vertical stirrups, from Eq. (6-21),

$$s \le \frac{A_v f_{yt} d}{V_u/\phi - V_c}$$

where $V_c = 36.4$ kips.

At d from the support, $V_u/\phi = 73.1$ kips, thus

$$s \le \frac{0.22 \text{ in.}^2 \times 40 \text{ ksi} \times 24 \text{ in.}}{73.1 \text{ k} - 36.4 \text{ k}} = 5.75 \text{ in.}$$

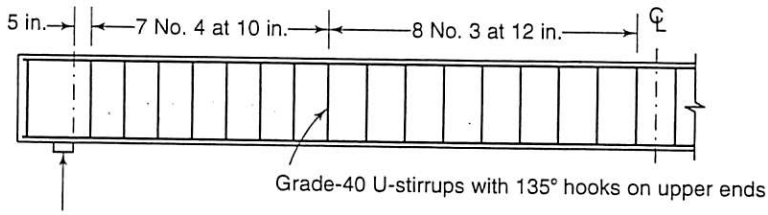

Fig. 6-35
Stirrups in beam for Example 6-1.

One No. 4 at 5 in. (8 in. from center of support)
Seven No. 4 at 10 in. (extends to 78 in. from center of support)
Eight No. 3 at 12 in. (extends to 174 in. from center of support)
Symmetrically placed in both halves of the beam span.

The final stirrup design is shown for half of the beam in Fig. 6-35, and a typical beam section is shown in Fig. 6-34b. ■

EXAMPLE 6-1M Design of Vertical Stirrups in a Simply Supported Beam—SI Units

Figure 6-36 shows the elevation and cross section of a simply supported T-beam. This beam supports a uniformly distributed service (unfactored) dead load of 20 kN/m, including its own weight, and a uniformly distributed service live load of 24 kN/m. Design vertical stirrups for this beam. The concrete is normal weight with a strength of 25 MPa, the yield strength of the flexural reinforcement is 420 MPa, and the yield strength of the stirrups is 300 MPa. Use load and resistance factors from ACI Code Sections 9.2.1 and 9.3.2.3.

1. Compute the design factored shear-force envelope. For ACI (Eq. 9-2) with F, T, H, L_r, S, and R all equal to zero. Total factored load:

$$w_u = 1.2 \times 20 \text{ kN/m} + 1.6 \times 24 \text{ kN/m}$$
$$= 62.4 \text{ kN/m}$$

Factored dead load:

$$w_{Du} = 1.2 \times 20 \text{ kN/m} = 24.0 \text{ kN/m}$$

Three loading cases should be considered: Fig. 6-36c, Fig. 6-36d, and the mirror opposite of Fig. 6-36d. The three shear-force diagrams are superimposed in Fig. 6-36e. For simplicity, we approximate the shear-force envelope with straight lines and design simply supported beams for $V_u = w_u\ell/2$ at the ends and $V_u = w_{Lu}\ell/8$ at midspan, where w_u is the total factored live and dead load and w_{Lu} is the factored live load (38.4 kN/m). From Eq. (6-14),

$$V_u \leq \phi V_n$$

Setting these equal, we obtain the smallest value of V_n that satisfies Eq. (6-14):

$$V_n = \frac{V_u}{\phi}$$

V_u/ϕ is plotted in Fig. 6-36f.

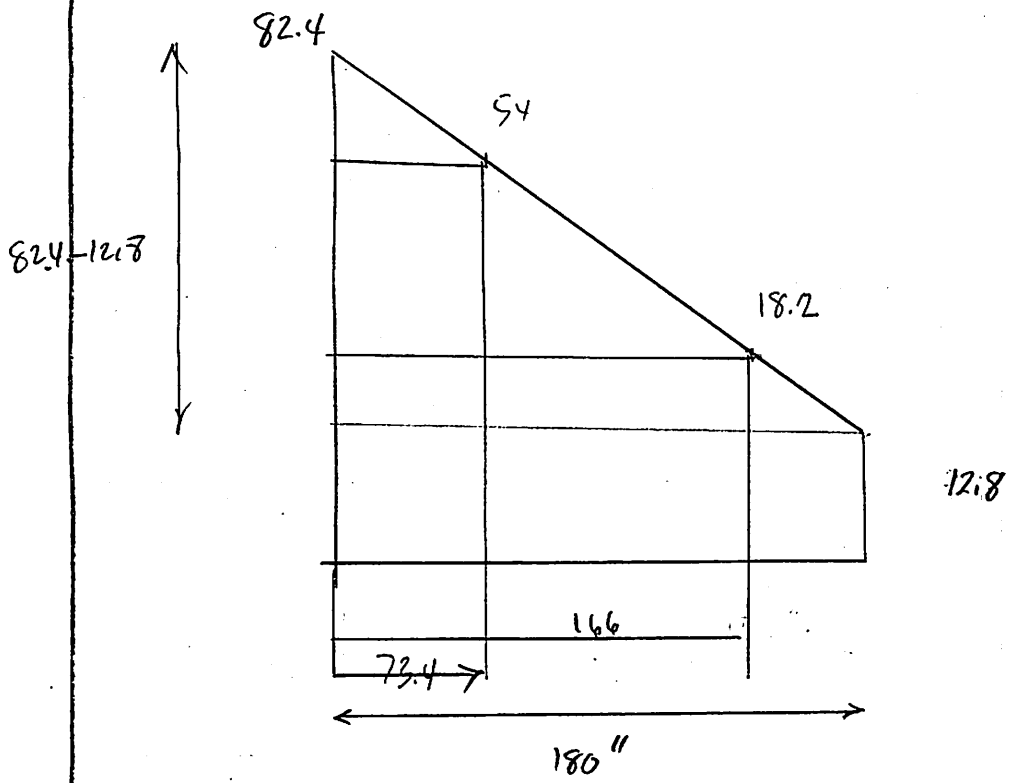

$$\frac{82.4-18.2}{82.4-12.8} = \frac{x}{180} \rightarrow x = 166''$$

75+96

161