**Problem 3c-5:** Determine the forces in members *IJ*, *BI*, and *BC*.

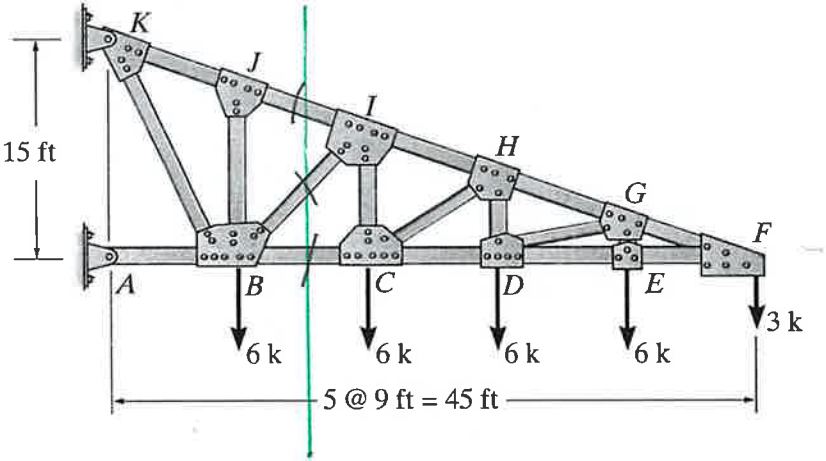


$$\circlearrowleft + \sum M_I = 0 = -F_{BC}(9') - 6^k(9' + 18') - 3^k(27')$$

$$F_{BC} = -27^k$$

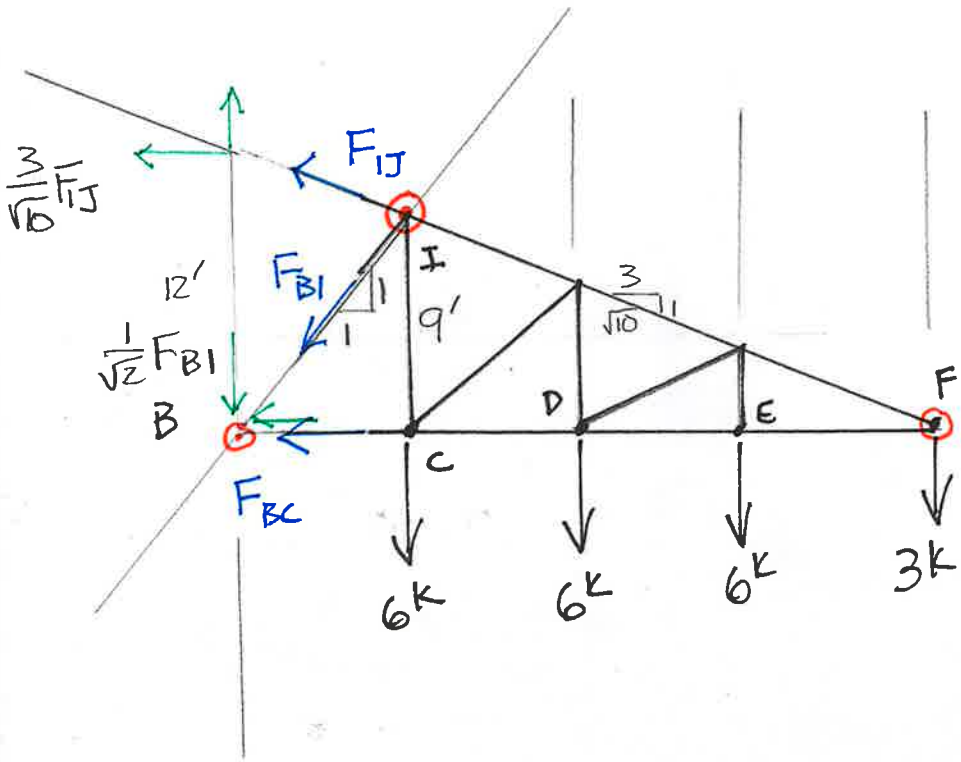


$$\circlearrowleft + \sum M_B = 0 = \frac{3}{\sqrt{10}}F_{IJ}(12') - 6^k(9' + 18' + 27') - 3^k(36')$$

$$F_{IJ} = 37.95^k$$

$$\circlearrowleft + \sum M_F = 0 = \frac{1}{\sqrt{2}}F_{BI}(36') + 6^k(9' + 18' + 27')$$

$$F_{BI} = -12.72^k$$

OR

$$+\uparrow \sum F_y = 0 = \frac{1}{\sqrt{10}}F_{IJ} - \frac{1}{\sqrt{2}}F_{BI} - 6^k - 6^k - 6^k - 3^k$$

$$F_{BI} = -12.72^k$$